# An Investigation into the Effect of Hydrodynamic Cavitation on Diesel using Optical Extinction

**R.D. Lockett[1], Z. Fatmi[2], O. Kuti[3], R. Price[4]**

[1,2,3]Department of Mechanical Engineering & Aeronautics, The City University, Northampton Square, London EC1V 0HB
[4]Shell Global Solutions, Brabazon House, Concord Business Park, Threapwood Road, Manchester, M22 0RR

r.d.lockett@city.ac.uk

**Abstract**. A conventional diesel and paraffinic-rich model diesel fuel were subjected to sustained cavitation in a custom-built high-pressure recirculation flow rig. Changes to the spectral extinction coefficient at 405 nm were measured using a simple optical arrangement. The spectral extinction coefficient at 405 nm for the conventional diesel sample was observed to increase to a maximum value and then asymptotically decrease to a steady-state value, while that for the paraffinic-rich model diesel was observed to progressively decrease. It is suggested that this is caused by the sonochemical pyrolysis of mono-aromatics to form primary soot-like carbonaceous particles, which then coagulate to form larger particles, which are then trapped by the filter, leading to a steady-state spectral absorbance.

## 1. Introduction

Modern diesel passenger car engines employ common rail fuel systems that typically operate at pressures in the range of 1,600 – 2,500 bar. The diesel fuel is supplied to a high-pressure pump, which compresses the diesel and provides it at high pressure to a common rail (pressure accumulator), which is connected to the fuel injectors. Metering of the diesel fuel flow in the pump is managed in different ways by different pump manufacturers. Some manufacturers meter the fuel at the inlet of their common rail pumps, while another utilizes a high-pressure pump spill return. However, there is a tendency for convergence on inlet metering for energy saving purposes. Both methods of metering create the opportunity for cavitation to occur during fluid compression, across the piston supply valves, and in the spill return. The injectors can be either solenoid or piezo actuated designs. The actuation of the injector, and the corresponding supply of fuel to the engine relies on the equalization of fuel pressure inside the diesel injector body through a spill path created by the lift of the actuator pin. The actuation of the spill port results in a pressure difference between the fluid pressure at the base of the injector (adjacent to the needle) and the fluid pressure above the needle, which induces the needle lift. Hence a significant proportion of the high pressure diesel fuel supplied to the pump and the injectors is returned to the tank at low pressure.

It is suggested that the fuel flow across the cylinder supply valves and spill ports in the pump, and the spill ports in the injectors result in cavitating flow, which may result in significant fuel degradation and ageing [1 - 8]. Indeed, cavitating fuel flows in diesel fuel injection equipment may be responsible for deposit formation in the injectors, leading to poor fuel-air mixing in the engine, and ultimately injector failure [1].

This consideration has led to a systematic investigation into the effect of sustained high pressure cavitation on diesel. Two cavitation recirculation flow rigs have been designed and manufactured, one of which was described in the paper of Lockett and Jeshani [9]. The experimental rig described in this paper is based on a similar design, using a high-pressure diesel pump.

## 2. Experimental

A schematic of the high-pressure cavitation flow rig is shown in Figure 1. It consists of a small tank, a low pressure priming pump, a fuel filter, a Denso Mk 2 diesel pump which is driven by a 7 kW electric motor, a common rail feeding a custom injector, which consists of a standard Delphi injector body housing an injector nozzle with a single 213 µm hole located on the symmetry axis. The diesel nozzle was provided with a 20% honed cylindrical nozzle hole. This nozzle was calibrated to provide a diesel mass flow rate of 0.3 l/min with 100 bar upstream pressure, ambient downstream pressure. A rail pressure of 1,650 bar is estimated to produce a diesel mass flow rate of approximately 1.2 l/min. The rig and nozzle are capable of producing nozzles flows with user-selectable cavitation numbers of up to 1,650, and Reynolds numbers of up to 50,000.

The nozzle discharges the cavitated diesel into an aluminium receiver. The diesel then passes from the receiver to a shell-and-tube heat exchanger, and then back to the tank. The rig is able to hold a maximum volume of approximately 4.0 litres. The volume of diesel used during a test is normally 3.1 ± 0.10 litres. After the fuel filter, an extra pipe passes a fraction of the diesel to a optically accessible cell. A 405 nm diode laser is directed through a 45$^{o}$ angled 90-10 TR beam-splitter, through the cell and onto a laser power meter. The 10 % reflected from the beam splitter is directed onto a second power meter (reference power meter). The optical arrangement and its calibration is described in detail in the IJER paper of Lockett and Jeshani [9].

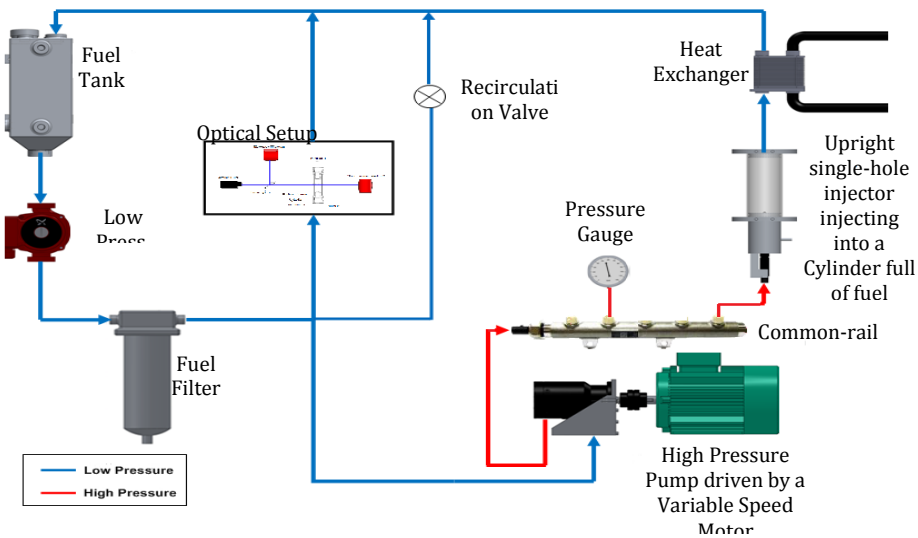


**Figure 1:** Schematic Diagram of High Pressure Diesel Cavitation Flow Rig

The rig was flushed twice with diesel prior to the cavitation flow experiment, in order to reduce contamination from the previous test to less than 1 %. In these experiments the diesel was subjected to 40 hours discontinuous cavitation flow at 550 bar, 1,100 bar and 1,650 bar (10 hours per day for 4 days). This was followed by subjecting diesel fuel and paraffin-rich model diesel (> 98 % paraffin content) to 130 hours of discontinuous cavitation (10 hours per day for 13 days).

## 3. Results

Figure 2 shows the variation in normalized spectral transmission at 405 nm with time for diesel samples cavitated at 550 bar, 1,100 bar and 1,650 bar. The spectral transmission coefficient is

observed to decrease more quickly as a function of fuel pressure. The minimum spectral transmission coefficient achieved appears to be approximately the same for all three pressures.

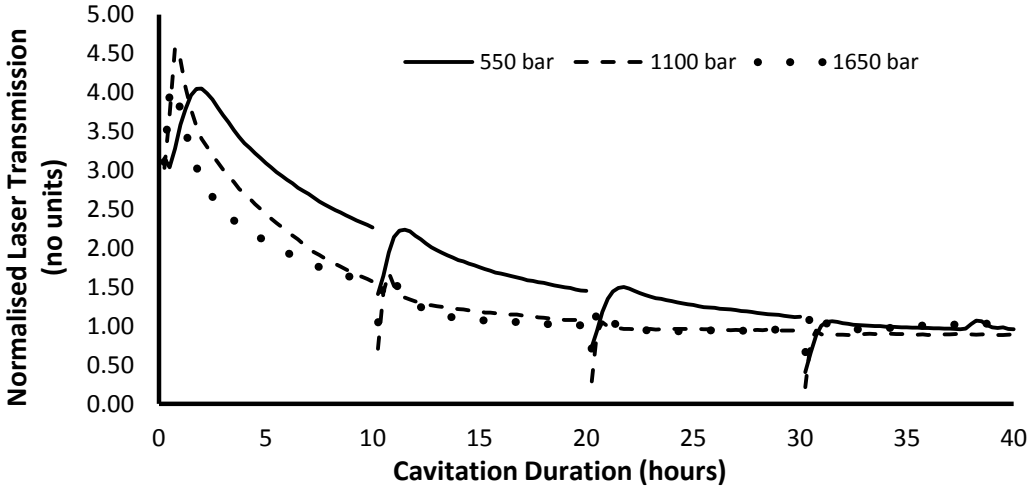


**Figure 2:** Graph of Normalised Transmission Coefficient of Diesel as a Function of Cavitation Time

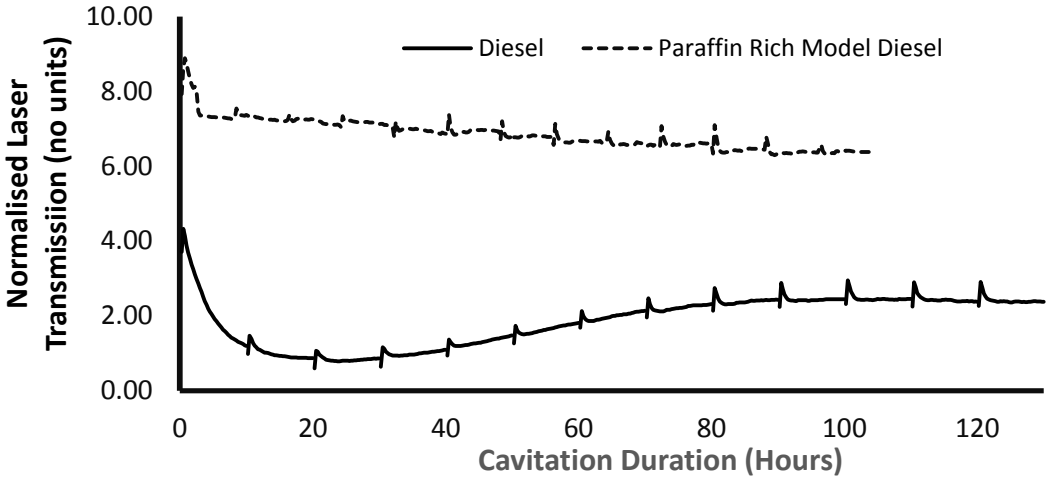


**Figure 3:** Graph of Normalised Transmission Coefficient of Diesel and Paraffin-Rich Model Diesel as a Function of Cavitation Time.

Figure 3 shows the variation in spectral transmission coefficient at 405 nm with time for diesel and paraffin-rich model diesel when the samples were subjected to cavitation flow at 1,650 bar for 130 hours. The spectral transmission coefficient for the diesel reaches a minimum value, and then begins to increase asymptotically to a steady-state value. On the other hand the spectral transmission coefficient for the paraffin-rich model diesel continues to decrease.

## 4. Discussion

The high-pressure cavitation flow rig employs a nozzle with an approximate mass flow rate of 1.2 l/min from a rail pressure of 1,650 bar. The volume of diesel in the rig is approximately 3.0 l. Therefore it takes approximately 2.5 minutes to cycle an entire volume of diesel through the injector, resulting in a net cycling rate of approximately 24 cycles/hour.

Figure 2 shows the difference in spectral transmission as a function of cavitation time for three rail pressures (550 bar, 1,100 bar and 1,650 bar). The characteristic timescales for the relative decrease in each curve (maximum to minimum) is approximately 23 hours (1,650 bar curve), 31 hours (1,100 bar

curve), and 40 hours (550 bar curve). These results suggest that the rate of decrease of transmission coefficient is principally dependent on the cycle time (determined by the mass flow rate). Taking into account the effect of the cycle time on the spectral transmission profile suggests that the cavitation intensity (measured by its impact on the diesel sample) is relatively independent of rail pressure.

It is suggested that the difference between the recorded variations in normalised transmission coefficient between conventional diesel and the paraffin-rich model diesel is due to the impact of cavitation on major chemical components present in diesel, but not present in the paraffin-rich model diesel. Conventional diesel consists of approximately 70 % - 75 % paraffins, 20 % - 25 % mono-aromatics, 3 % di-aromatics, 1 % tri-aromatics, and other trace components (< 1 % additives, detergents and cleaning agents) [10]. Given that the mono-aromatics were the dominant components present in diesel that were not present in the paraffin-rich model diesel, it is suggested that the hydrodynamic cavitation induced in the high pressure cavitation flow rig produced a significant sonochemical pyrolysis effect on the mono-aromatics present in the diesel. 2-Column gas chromatography measurements and laser particle size and concentration measurements have been conducted on a number of cavitated diesel samples, which show that the concentration of mono-aromatics present in the diesel decreases during high-pressure cavitation, leading to the formation of a diesel particle suspension. This is to be published elsewhere [11].

The spectral transmission profile shown in Figure 3 is explained by the following argument. The hydrodynamic cavitation of the diesel results in sonochemical pyrolysis of the mono-aromatics, leading to primary soot-like particle formation (responsible for the decrease in spectral transmission coefficient). The formation of particles in this manner and their observation has been identified in R. Price et al. and G. Price et al. using ultrasound cavitation [1, 4]. The coagulation of primary particles to form larger particles (through Brownian motion and coagulation kinetics) [1], together with large particle filtration trapping produces the later increase in spectral transmission to a steady-state quasi-equilibrium value.

## 5. Conclusion

A conventional diesel fuel and a paraffin-rich model diesel have been subjected to long term cavitation tests in a new high-pressure cavitation flow rig. Optical absorption measurements conducted during the cavitation have demonstrated the effect of pressure on the spectral transmission coefficient. The results suggest that the profiles are affected principally by the cycle time, and that the cavitation intensity is independent of the rail pressure. Long term cavitation results in the spectral transmission coefficient decreasing to a minimum, followed by a rise to a steady-state quasi-equilibrium value. A sonochemistry pyrolysis mechanism, together with particle coagulation kinetics and large particle filtration, is suggested to explain the observed spectral transmission coefficient profile with time.

**References**

[1] Price R., Blazina D., Smith G., Davies T., 2015, *Fuel* **156**: 30 - 39.
[2] Suslick KS, Gawienowski JJ, Schubert PF and Wang HH., 1983 *J Phys Chem* **87(13)**: 2299–2301.
[3] Price GJ and McCollom M. 1995, *Ultrason Sonochem* **2(2)**: S67–S70.
[4] Price GJ and McCollom M., 1995, *Fuel* **74(9)**: 1394–1397.
[5] Ullman J, Geduldig M, Stutzenberger H, Caprotti R, Balfour G. SAE Paper 2008-01-0926, 2008.
[6] Pehan S, Jerman MS, Kegl M and Kegl B. 2009 *Fuel* **88(6)**: 970–979.
[7] Caprotti R, Breakspear A, Graupner O, Klaua T and Kohnen O. SAE Paper 2006-01-3359, 2006.
[8] DI Common Rail Diesel Engine Nozzle Coking Test, 2008, CEC F98-08 (S) DW-10.
[9] Lockett R., Jeshani M. 2013 *Int. J. Eng. Res.* **14:6** 606 - 621.
[10] Erwin J., Division of Fuel Chemistry, American Chemical Society 1992 *Symposium on Processing and Product Selectivity of Synthetic Fuels*, 1915 - 1923.
[11] Lockett R., Jeshani M., 2015 to be published.

**Acknowledgements:**
The authors would like to acknowledge Shell Global Solutions for funding this work, and the technical assistance of G. Clow and J. Ford of City University.